EPCET LIBRARY BANGALORE

CBCS SCHEME

USN | | | | | | | | | | |

BME602

# Sixth Semester B.E./B.Tech. Degree Examination, June/July 2026
## Machine Design

Time: 3 hrs. Max. Marks: 100

***Note: 1. Answer any FIVE full questions, choosing ONE full question from each module.***
***2. M : Marks , L: Bloom's level , C: Course outcomes.***
***3. Use of machine design data hand book is permitted.***
***4. Assume any missing data suitably.***

| | | Module – 1 | M | L | C |
|---|---|---|---|---|---|
| Q.1 | a. | A 50 mm diameter steel rod supports a 9.0 kN load and in addition is subjected to a torsional moment of 100 N.m as shown in Fig. Q1 (a). Determine the maximum tensile and the maximum shear stress. 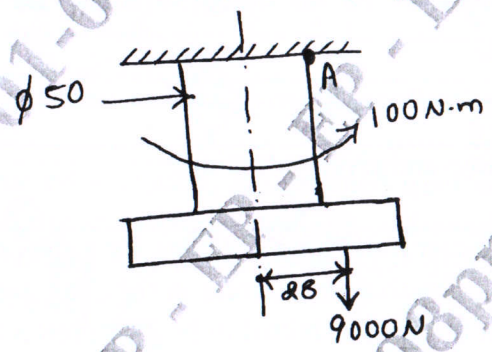  Fig. Q1 (a) | 10 | L3 | CO1 |
| | b. | A rod of circular section is to sustain a torsional moment of 300 kN.m and bending moment 200 KN-m. Selecting C45 steel ($\sigma_y$ = 353 MPa) and assuming factor of safety = 3, determine the diameter of rod as per the following theories of failure : (i) Maximum shear stress theory. (ii) Distortion Energy Theory. (iii) Total Energy Theory. | 10 | L3 | CO1 |
| | | **OR** | | | |
| Q.2 | a. | A bar of rectangular section is subjected to an axial pull of 500 kN. Calculate its thickness if the allowable tensile stress in the bar is 200 MPa. Refer Fig. Q2 (a). 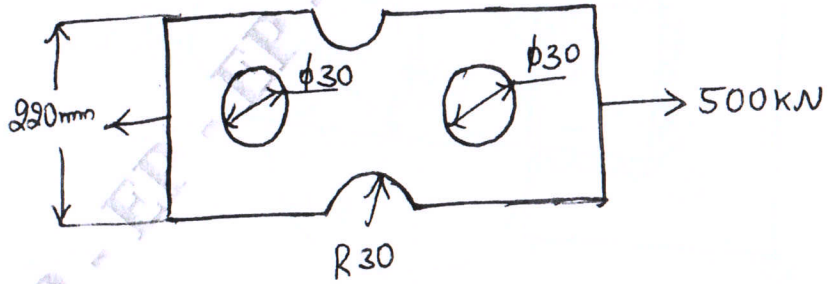  Fig. Q2 (a) | 12 | L3 | CO1 |

| | | | | | |
|---|---|---|---|---|---|
| | b. | Derive Soderburg's equation when a member is subjected to fatigue axial loading. | 8 | L2 | CO1 |
| | | **Module – 2** | | | |
| Q.3 | | A shaft is supported by two bearings placed 1 m apart. A 500 mm diameter pulley is mounted at a distance of 200 mm to the right of left hand bearing and this drives a pulley directly below it with the help of belt having maximum tension of 3000 N. The pulley weighs 10000 N. Another pulley 300 mm diameter is placed 300 mm to the left of right hand bearing is driven with the help of electric motor and the belt which is placed horizontally to the right when viewed from the left bearing. This pulley weighs 500 N. The angle of contact for both the pulleys is 180° and $\mu = 0.24$. Determine suitable diameter for a solid shaft assuming torque on one pulley is equal to torque on other pulley. Choose C15 steel ($\sigma_y = 235.4$ MPa take $\sigma_u = 425$ MPa) as the shaft material and use ASME code for the design of shaft. Assume minor shock condition. | 20 | L3 | CO2 |
| | | **OR** | | | |
| Q.4 | a. | What are the types of keys and give application? | 6 | L1 | CO3 |
| | b. | Design a protected type cast iron flange coupling for a steel shaft transmitting 30 K at 200 rpm. The allowable shear stress in the shaft and key material is 40 MPa. The maximum torque transmitted to be 20% greater than the full load torque. The allowable shear stress in the bolt is 60 MPa and the allowable shear stress in the flange is 40 MPa. | 14 | L3 | CO3 |
| | | **Module – 3** | | | |
| Q.5 | a. | A double riveted lap joint is to be made between 9 mm plates. If the safe working stresses in tension, crushing and shear are 80 N/mm$^2$, 120 N/mm$^2$ and 60 N/mm$^2$ respectively, design the riveted joint. | 10 | L3 | CO3 |
| | b. | Determine the size of weld required for an eccentrically loaded weld as shown in Fig. Q5 (b). The allowable stress in the weld is 75 N/mm$^2$. 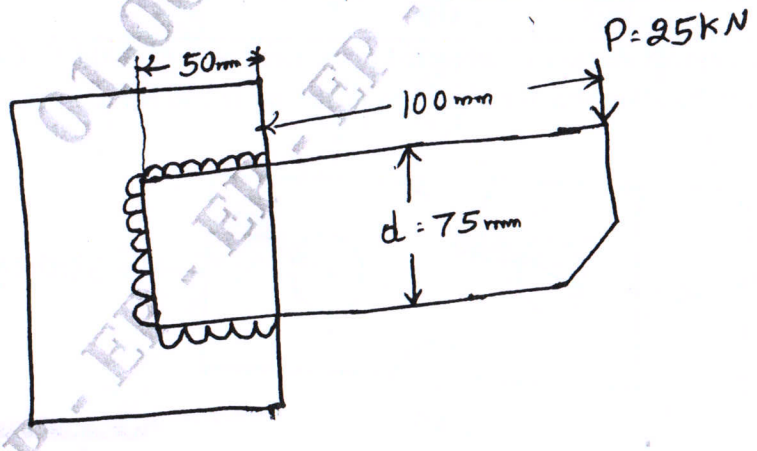  Fig. Q5 (b) | 10 | L3 | CO3 |

| | | | | | |
|---|---|---|---|---|---|
| | | **OR** | | | |
| **Q.6** | | A pair of high grade cast iron with 20° full depth teeth transmits 8 kW at 900 rpm of pinion. The transmission ratio desired is 4 and number of teeth on the pinion is 20. Design the gear based on strength. | **20** | **L3** | **CO3** |
| | | **Module – 4** | | | |
| **Q.7** | | A vertical drilling machine requires a set of bevel gear to reduce the speed from 2500 rpm to 1250 rpm at the spindle. Design the bevel gear drive with 20° full depth teeth for a power to be transmitted is to be 20 kW. Select proper material.<br>Pinion – SAE 1030 Heat treated<br>Gear – Cast steel Heat treated<br>Design and check wear. | **20** | **L3** | **CO4** |
| | | **OR** | | | |
| **Q.8** | **a.** | Define Warm Gear and how it works. Write the applications. | **6** | **L1** | **CO4** |
| | **b.** | Design a warm gear drive consists of hardened steel worm and phosphour bronze gear have 20° stub involute teeth and transmission ratio is 10. The worm speed is 2000 rpm and transmits a power of 12 kW with a centre distance is to be 200 mm. | **14** | **L3** | **CO4** |
| | | **Module – 5** | | | |
| **Q.9** | **a.** | Determine the power transmitted by a single pair plate clutch assuming uniform pressure distribution. The friction surfaces have an outside diameter of 350 mm and an inner diameter of 280 mm. The co-efficient of friction is 0.25 and the maximum allowable pressure is 0.85 MPa. | **10** | **L3** | **CO3** |
| | **b.** | Fig. Q9 (b) shows a single block brake. The brake drum diameter is 400 mm and rotates at a speed of 150 rpm. The friction material permits a maximum pressure of 0.5 MPa and $\mu = 0.25$. Face width of the block is 50 mm. If the brake is applied for 10 secs at full capacity to bring the shaft to stop. Determine : (i) Effort (ii) Maximum torque (iii) Heat generated<br>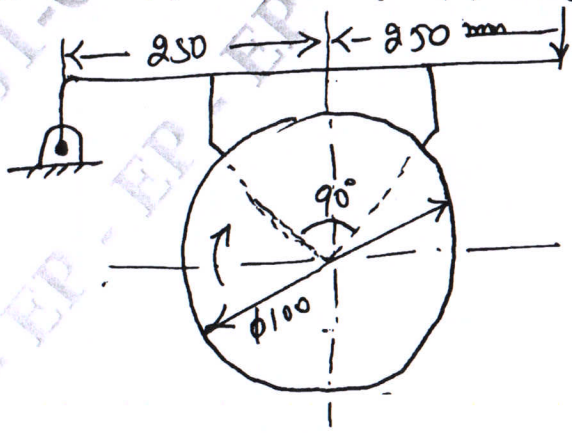<br><br>Fig. Q9 (b) | **10** | **L3** | **CO3** |

| | | | | | |
|---|---|---|---|---|---|
| | | **OR** | | | |
| **Q.10** | **a.** | Derive Petroff's Equation. | **10** | **L2** | **CO5** |
| | **b.** | A full journal bearing has a diameter of 45 mm and length 65 mm that diametral clearance ratio is 0.0015, the speed of the shaft is 3000 rpm and radial load is 900 N. The oil used has a viscosity of 0.01 Pa-S at its operating temperature. Determine<br>(i) Co-efficient of friction<br>(ii) Power loss<br>(iii) Frictional torque<br>(iv) Summer field number. | **10** | **L3** | **CO5** |

* * * * *

VTU-01-06-2026 01:31:26pm - EP - EP - EP